PRO DG
PROFESSIONAL DIGITAL GENERATION
SYSTEMS



"Blast your sound to the next level"

AVIATOR LA 212 P

User manual



This manual has been designed to help AVIATOR LA 212 P de Pro DG Systems system users from Pro DG Systems to its correctly use and understand its benefits and versatility.

Before using the product, carefully read "Precautions" section of this manual (pages 4 - 5). Please keep this document in a safe place for future reference.

Before flying the system, carefully read "Safety instructions" subsection, located in "Flight hardware" section (pages 32 - 33).

The information included in this document may be changed without prior notice. To stay up to date with the latest version of this document, we recommend that you periodically consult Pro DG Systems website.

When reselling this product, give this document to the new owner. If you supply Pro DG Systems products, please inform your customers about this document.

Index

Precautions ..... **4 - 5**

Warranty **5**

Declaration of conformity **6**

Introduction

- Description ..... **7 - 8**
- Technical datasheet **9**
- Architectural specifications **10**

User guide

- First steps **10**
- Troubleshooting ..... **11 - 12**

Components

- Speakers ..... **13 - 14**
- Compression driver ..... **14 - 15**
- Horn **16**

Flight hardware

- Safety instructions ..... **17 - 18**
- Components ..... **18 - 19 - 20**
- How to fly the system up ..... **21 - 22**
- Stack mode usage **23**

Ease Focus prediction software **24**

Accessories **25**

Precautions

Please read, keep and follow all safety and use instructions.

Important Safety Instructions.

1. Heed all warnings.

2. Do not overload the box to avoid damage to the speakers.

3. Do not use this product near water. If the box is used outdoors, make sure that no humidity can enter the box.

4. Clean only with a dry cloth.

5. Do not block any ventilation openings. Install in accordance with the manufacturer's instructions.

6. Do not install near any heat sources such as radiators, heat registers, stoves or similar (including amplifiers).

7. Do not defeat the safety purpose of the polarized or grounding-type plug. A polarized plug has two blades with one wider than the other. A grounding-type plug has two blades and a third grounding prong. The wider blade or third prong is provided for your safety. If the provided plug does not fit in your outlet, consult an electrician for replacement of the obsolete outlet.

8. Protect the power cord from being walked on or pinched, particularly at plugs, convenience receptacles, and the point where it exits from this product.

9. Only use attachments/accessories specified by the manufacturer.



10. Use only with the cart, stand, tripod, bracket or table specified by the manufacturer or sold with the product. When a cart is used, use caution when moving the cart/product combination to avoid injury from tip-over.

11. Unplug this product during lightning storms or when unused for long periods of time.

12. Refer all servicing to qualified personnel. Servicing is required when the product has been damaged in any way such as power-supply cord or plug is damaged, liquid has been spilled or objects have fallen into the product, the product has been exposed to rain or moisture, does not operate normally, or has been dropped.

WARNINGS / CAUTIONS:



This symbol on the product means there is uninsulated, dangerous voltage within the product enclosure that may present a risk of electrical shock.



This symbol on the product means there are important operating and maintenance instructions in this guide.



This symbol indicates that the product cannot be treated as ordinary household waste, it must be deposited at the corresponding collection point for electrical and electronic equipment.



This product contains magnetic material. Consult your doctor on whether this might affect your implantable medical device.



Contains small parts which may be a choking hazard. Not suitable for children under age 3.

Warranty

All the Pro DG Systems products have a 24-month warranty period, which begins from the invoice date of the first purchase.

Consult everything relevant to the warranty conditions at Pro DG Systems website: https://prodgsystems.com/20-vc-warranty.html

Or via email at: info@prodgsystems.com

Declaration of conformity

Pro DG Systems declares that the product with reference **AVIATOR LA 212 P** complies with the objectives expressed in the following **European Directives:**

- Low voltage 2014/35/UE.
- Electromagnetic compatibility 2014/30/UE.
- RoHS 2011/65/UE. About restrictions on the use of certain dangerous substances in electrical and electronic equipment.
- RAEE / WEEE 2012/19/UE. About waste electrical and electronic equipment.
- General Product Safety 2023/988/UE.

And it complies with the following **European Harmonized Standards**:

- EN 60065:2014. Audio, video and analog electronic devices.
- EN 55032:2012. Electromagnetic compatibility of multimedia equipment. Part 1: emission requirements.
- EN 55103-2:2009. Electromagnetic compatibility. Part 2 Immunity.

This declaration is available for request by email: info@prodgsystems.com

Or to be downloaded from the website: www.prodgsystems.com

Description

AVIATOR LA 212 P is one of the Line Array systems from the new **AVIATOR Series**.

The new AVIATOR Series from **Pro DG Systems** has been developed with the purpose of offering the best quality-price ratio on the market. It has a completely modernized appearance, great power and reduced weight thanks to the incorporation of state-of-the-art Lavoce Italiana components.

Designed in Spain, the new AVIATOR LA 212 P is the passive three-way Line Array system with the best quality-price ratio on the market.

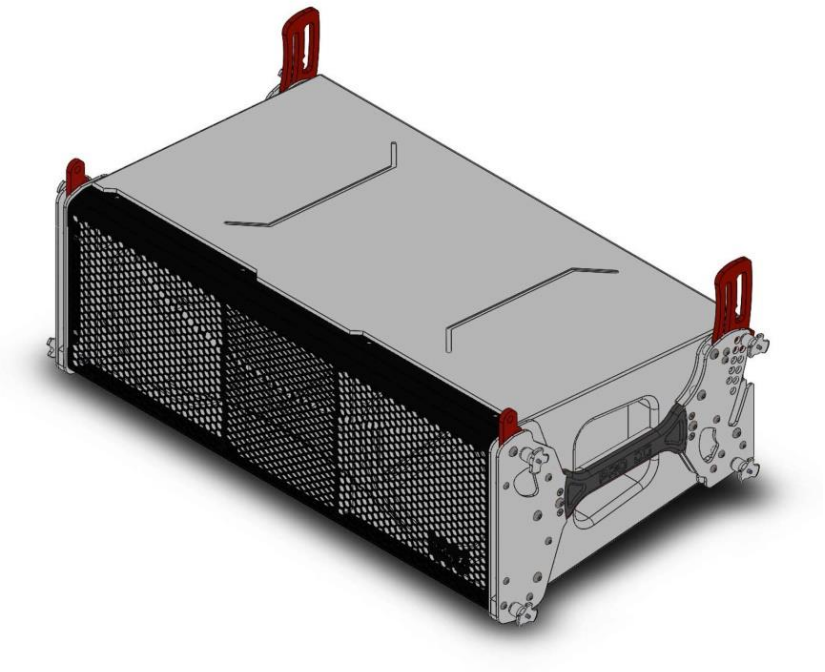

Equipped with two 12” Lavoce Italiana speakers in a tuned enclosure. The HF section features a 1/4” Lavoce Italiana compression driver coupled to a waveguide.

The transducer configuration generates a symmetrical and horizontal dispersion of 90º without secondary lobes in the frequency range.

Ease Focus prediction software is available.

At Pro DG Systems we know the importance for professionals of having a flexible, easily configurable system that guarantees maximum sound performance without the cost of external processors or additional wiring.

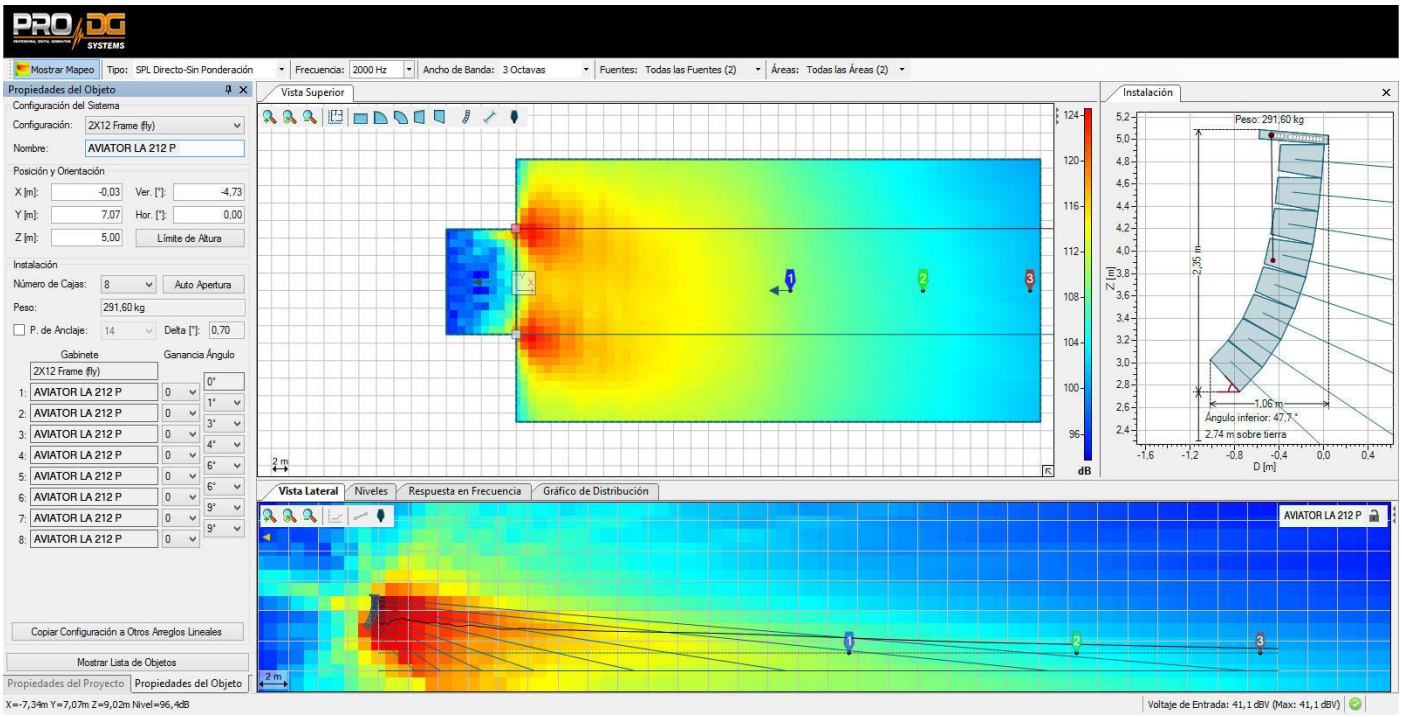

The construction of the AVIATOR LA 212 P system is made of birch plywood using CNC machining, with a special polyurea finish resistant to impacts and inclement weather. Its front part is protected by a robust metal grille and acoustic foam.

The **flight hardware** design of AVIATOR LA 212 P system is quick and intuitive to use. The fly bar also allows the use of several units in stack format.

Easy to transport thanks to its compact, lightweight and ergonomic design, offering a pleasant visual impact too. AVIATOR LA 212 P has all the necessary accessories for transport and complete wiring ready to plug in and work.

The perfect solution as main PA at outdoor events or permanent installation. Ideal for working in live concerts, theaters, coverage under amphitheaters, places of worship, corporate applications and all types of events where high performance and versatility are necessary.

Technical datasheet

AVIATOR LA 212 P	
Power handling	1100 W RMS / 2200 W program / 4400 W peak.
Maximum SPL Calculation	1m / 130 dB continuous / 133 dB program / 136 dB peak.
Nominal impedance	8 Ohm.
Frequency range	65 - 20000 Hz.
Dispersion angle	90º horizontal. Vertical dependent on distribution.
MF and LF components	Two Lavoce Italiana 12” speakers. Neodymium. 500 W RMS (per unit).
HF component	One Lavoce Italiana 1/4" compression driver. Neodymium. 100 W RMS.
Frequency cut-off for LF *	Without subwoofer: 65 Hz Linkwitz-riley 24 filter - 250 Hz Linkwitz-riley 24 filter. With subwoofer: 90 Hz Linkwitz-riley 24 filter - 250 Hz Linkwitz-riley 24 filter.
Frequency cut-off for MF *	250 Hz Linkwitz-riley 24 filter - 1200 Hz Linkwitz-riley 24 filter.
Frequency cut-off for HF *	1200 Hz Linkwitz-riley 24 filter - 18 kHz Linkwitz-riley 24 filter.
Frequency cut-off for subwoofer *	Up to 90 Hz Linkwitz-riley 24 filter.
Connectors	2 x Speakon NL8 MP.
Construction	Birch plywood using CNC machining. 2mm thick perforated steel front grille, with oven-dried black electrostatic powder paint finish. Includes acoustic foam.
Paint	Special polyurea finish resistant to impacts and inclement weather. Black color (standard).
Dimensions (height x width x depth)	352 x 966 x 468 mm (13,86 x 38,03 x 18,43 in).
Weight	42,5 Kg (93,70 lbs) net / 45,5 Kg (100,31 lbs) with packaging.

***** Disrespect the suggested frequency cuts-off on the different ways may cause components breakage.

Architectural specifications

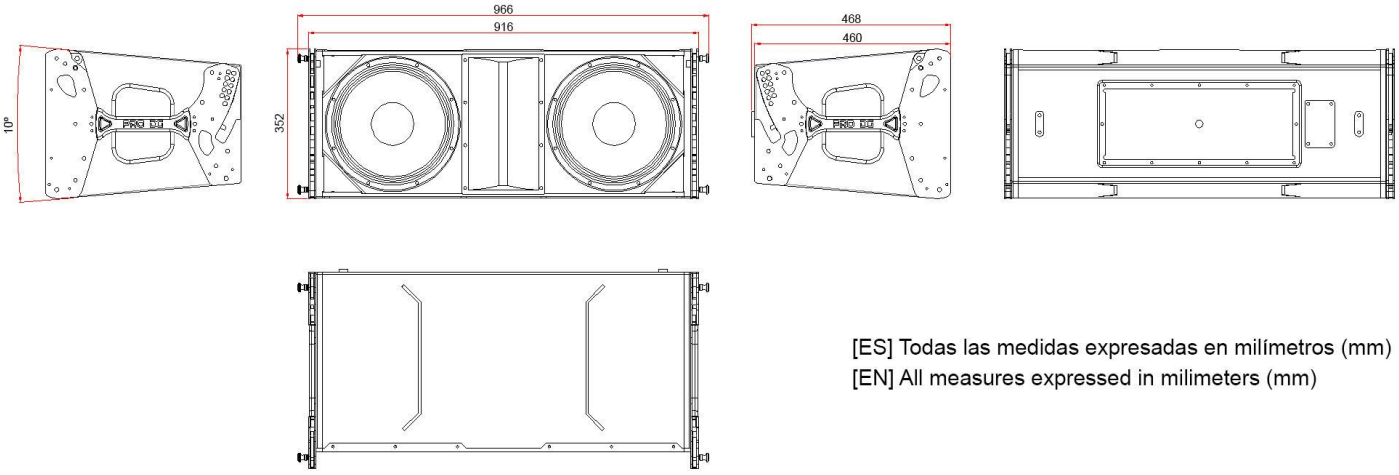

[ES] Todas las medidas expresadas en milímetros (mm)
[EN] All measures expressed in milimeters (mm)

User guide. First steps

Turning On / Off

Turning on any sound system must be done from back to front. Turn on sources such as CD players first, then the mixer, then the processors, and finally the amplifiers.

When turning off the sound system, follow the reverse process, turning off the amplifiers before any other element of the system.

Both the power connector and the cabling must always be accessible and must never be covered or blocked.

To disconnect the power, remove the Speakon NL8MP type cable from the connector located on the rear plate of the equipment, perform this operation on all boxes.

Important: do not unplug the computer when music is playing.

User guide. Troubleshooting

Problem	Cause	Solution
Neither unit sounds.	1. The amplifier is not sending signal. 2. Defective cable. 3. Excessive number of speakers connected to the same amplifier channel.	1. Check that the amplifier is turned on and that the gain is not at minimum. a. Check that the signal is reaching the amplifier from the mixing console. 2. Make sure the cables are connected correctly and none are damaged. If so; use another cable. 3. Check the minimum impedance that your amplifier can handle.
No sound on one unit.	The unit is not receiving signal.	Check that the signal cable is connected correctly; if damaged, replace it.
Distorted sound signal.	The mixer or other signal is distorting.	Lower the overall mixer output level or channel gain. Check that the signal source is ok.
Distorted and very loud sound signal.	The system is being overloaded with too much input signal and has reached maximum power.	Lower the mixer output level.

Noise or buzz when light controls are used in the same environment.	1. The sound system is connected to the same phase than the lights. 2. The sound cables are too close to the light cables.	1. Connect the sound system and lighting system to different phases. Request the help of an electrician. 2. Aleje los cables de audio de los cables de luces.
The system does not turn on even though the power cable is correctly connected, both to the network and to the box.	1. Defective cable. 2. Internal fuse blown.	1. Check the cables, connectors and power outlet with a tester or multimeter. 3. Contact your Pro DG Systems distributor or authorized professional to perform the repair.



If you have any technical problem or questions about Pro DG Systems products; contact our technical support department at: sat@prodgsystems.com

Speakers

AVIATOR LA 212 P includes two 12” Lavoce Italiana speakers with neodymium magnet, in charge of reproducing low and medium frequencies.

Main characteristics
Power handling of 500 W RMS / 1000 W program
Optimized cooling system
Optimized neodymium magnetic circuit
3” CCAW voice coil
5,2 Kg weight (per unit)
Optimized to deliver great LF and MF range performance





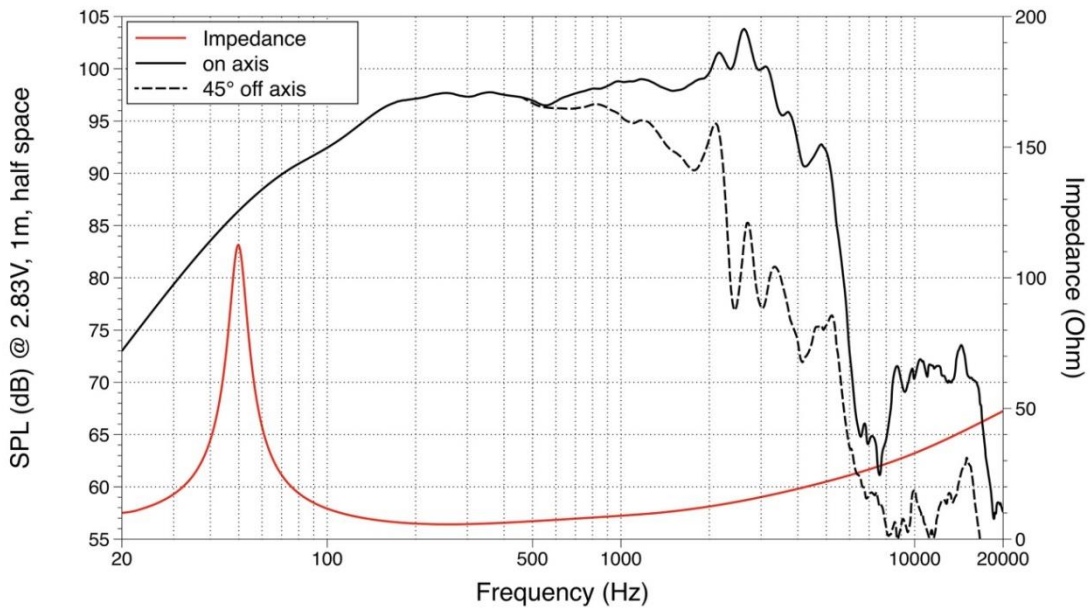

Architectural

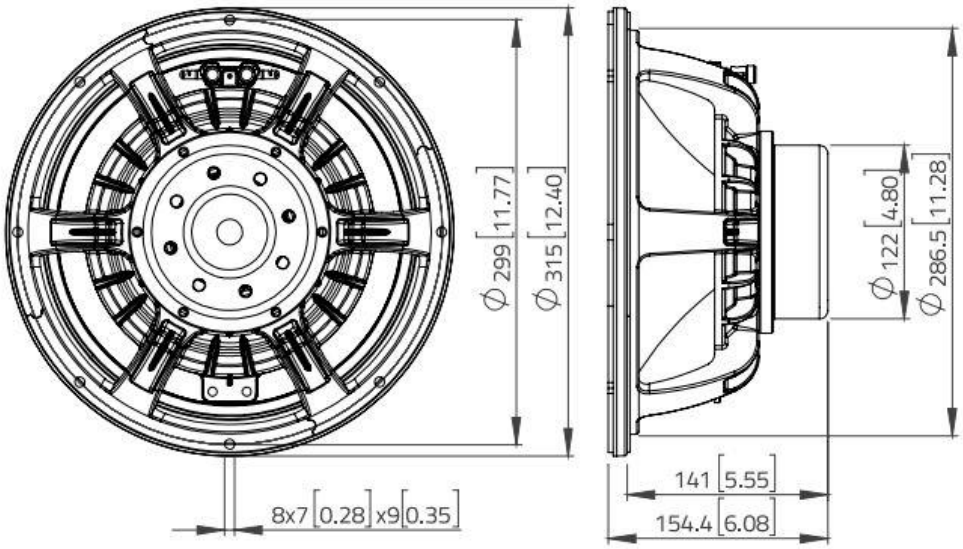

Compression driver

The HF section of the AVIATOR LA 212 P has one 1/4” Lavoce Italiana compression driver with neodymium magnet, in charge of reproducing high frequencies.



Main characteristics
Power handling of 100 W RMS / 200 W program
FEM optimized motor, phaseplug and diaphragm
3” edgewound CCA voice coil
Titanium diaphragm and polyamide surround
State-of-the-art HF design
Patented IIS integral input Surface phaseplug
2 Kg weight (per unit)

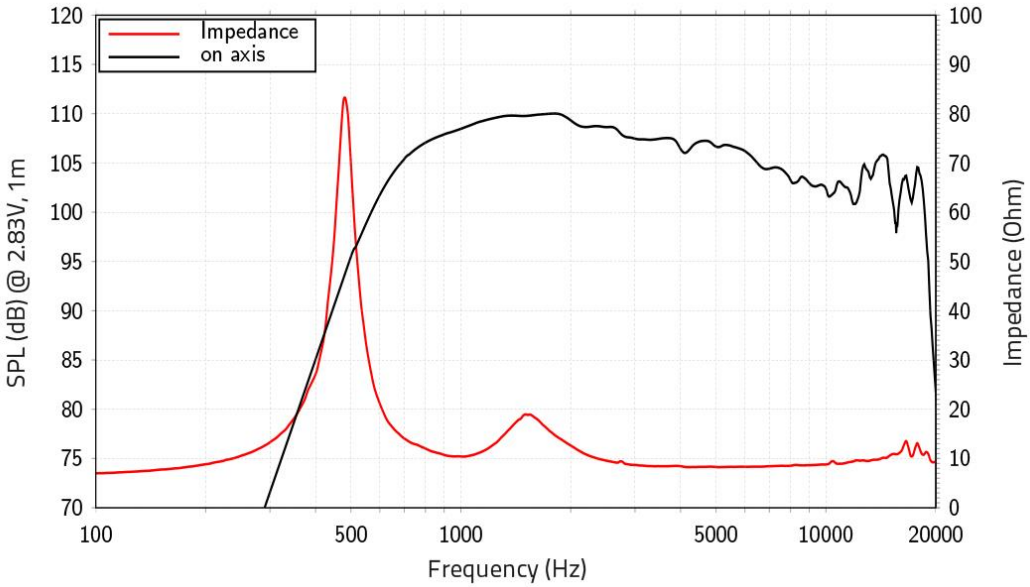

Architectural

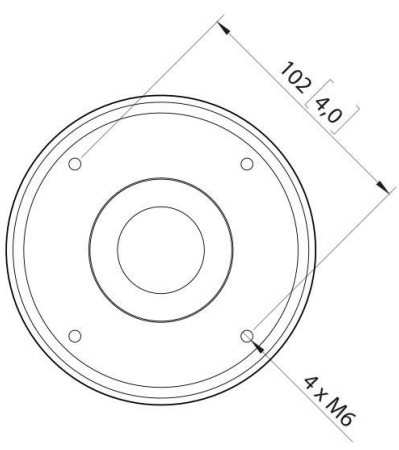

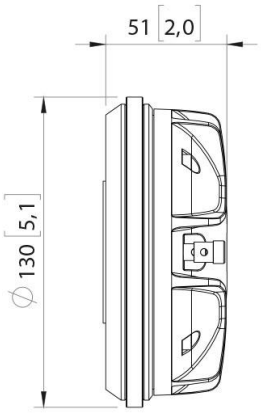

Horn

The compression driver of the AVIATOR LA 212 P is coupled to a horn, specifically designed to achieve maximum performance and acoustic quality in high frequencies.



Made of fiberglass (BMC) and polyurethane (PU2). The combination of both materials allows obtaining a horn with great resistance and low weight, also providing a perfect blend between medium and high frequencies.

Measures (Height x Width x Depth):
330 x 195 x 215 mm (12,99 x 7,68 x 8,47 in)

Flight hardware. Safety instructions

Before flying the system, it is mandatory to take into account the following safety instructions:

- Always carry out a visual and functional inspection of the various components before use. In case of doubt about the correct functioning and safety of the components, they must be removed from use immediately.

- The fly bar for AVIATOR LA 212 P (reference: FB LA 212) is designed to support up to a maximum of sixteen units AVIATOR LA 212 P. In no case should the aforementioned number of units be exceeded.

- In case of using the system in stacked format on a subwoofer; the maximum number of stackable units allowed will be 6 units. Always secure the array to the subwoofer by using slings.

- The hanging of the units must be carried out by professionals with adequate knowledge of the components and hardware to be used. This process must be carried out by at least two people.

- It is the responsibility of the person or team installing the system to ensure that the suspension / fixing points are suitable for the intended use.

- The application of safety factors of 5:1 for enclosures and static parts is accepted in a standardized manner. For those elements subjected to fatigue due to friction and variations in the stresses to which they are subjected, the following safety factors must be met: 5:1 for steel cable slings, 4:1 for steel chain slings and 7:1 for polyester slings. This means that an element with a breaking stress of 1000 Kg can be subjected to a static working load of 200 Kg (safety factor 5:1) and a dynamic load of only 142 Kg (safety factor 7:1).

- When hanging a system, the working load must be less than the strength of each individual anchor point as well as each enclosure.

- When suspending elements from the ceiling or other structures, extreme caution must be taken by previously calculating their resistance. Sound systems should never be hung on structures that do not guarantee full safety guarantees.

- When hoists are in operation (when lifting the system), ensure that no one is directly under or near the load.

- Under no circumstances scale or hang to the array.



- It will be necessary to fix at different points those systems that are subject to gusts of wind, to avoid their swaying. In no case is it recommended to fly systems that are subject to strong gusts of wind.

- No risk should be accepted in terms of public safety. It is the responsibility of the person or team of people carrying out the assembly to provide themselves with personal safety elements, such as helmet, gloves, safety footwear, etc., to carry out this work. As well as the correct signage of the space in which work is being done.

- All accessories used to fly a Pro DG Systems sound system not provided by Pro DG Systems are the responsibility of the user(s).

In no case will Pro DG Systems be responsible for damages caused by incorrect use of the flying system by the user or users, whether physical damage to people or damage to the product or the attached facilities. As well as for failure to comply with the previously indicated safety instructions.

Flight hardware. Components

At Pro DG Systems we know the importance for the professional of installing the different systems in a simple, fast and safe way. AVIATOR LA 212 P flight system has been designed to guarantee these purposes. The different components are detailed below:

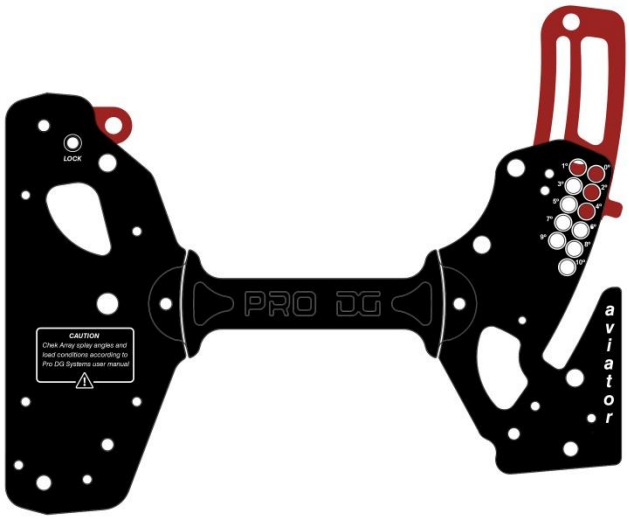

Hardware

Integrated into the box chassis itself.

Include retractable cams, their release and fixation are carried out by extracting / inserting the pins in the different points housed for this purpose.

The rear hardware has different points that allow individual angulation of each box. By default, each box is served placed at the “0” point (zero angle degree).

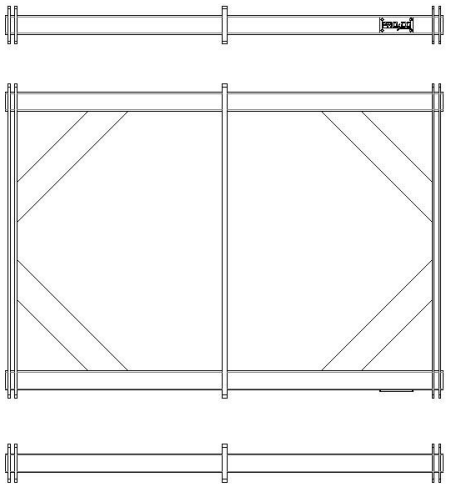

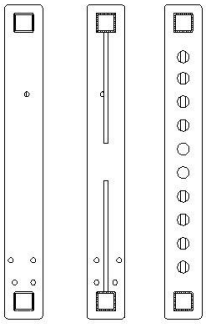

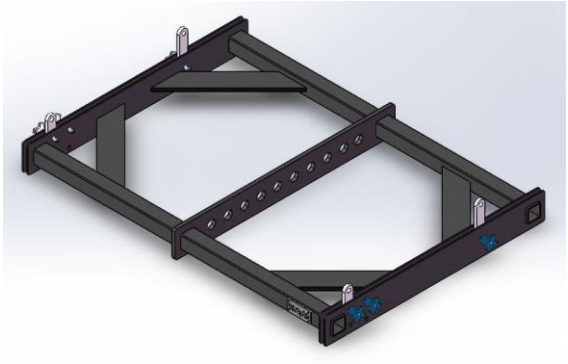

FB LA 212

Made of high-strength steel with oven-dried black electrostatic powder paint finish.

It allows the raise up of a maximum of sixteen units AVIATOR LA 212 P. It also serves as a fixing base to use the system in stacked format on subwoofers.

Measures (height x width x depth): 80 x 926 x 665 mm (3,15 x 36,46 x 26,18 in)

Weight: 30 Kg (66,14 lbs).

Fixation of the fly bar to the box.

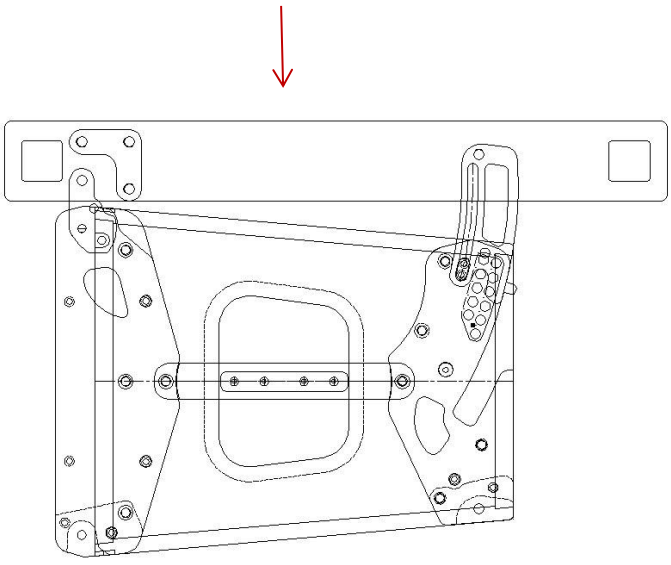

Fly bar fixation to use in stacked format.

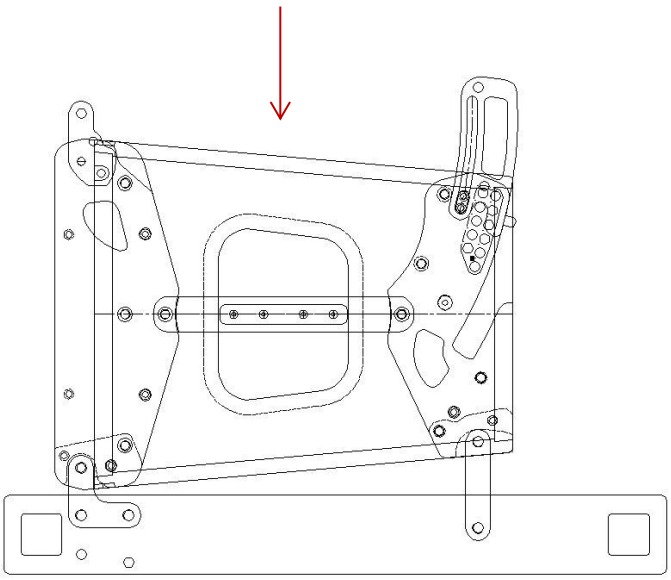

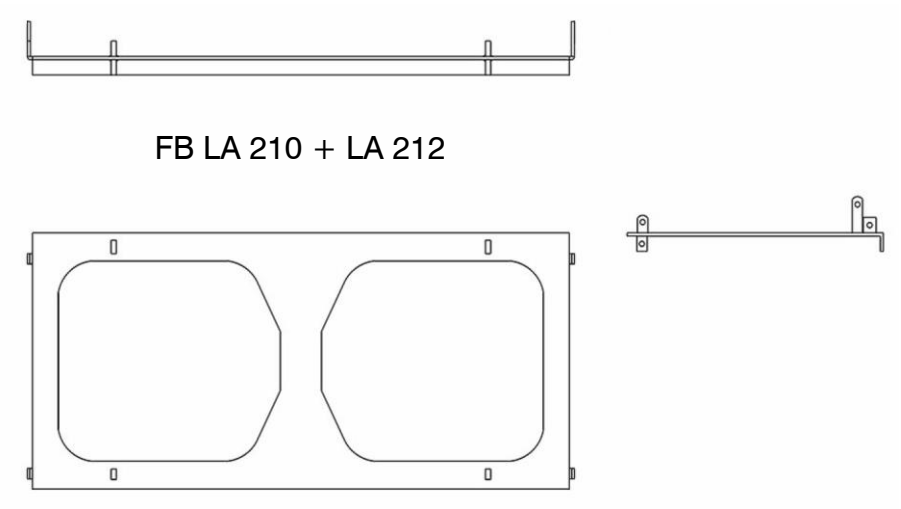

FB LA 210 + LA 212

FB LA 210 + LA 212

Made of high-strength steel with oven-dried black electrostatic powder paint finish.

Allows the combination of AVIATOR LA 210 A and AVIATOR LA 212 P Line Array systems. It allows the raise up of a maximum of sixteen units between both systems (example; eight units AVIATOR LA 210 A + eight units AVIATOR LA 212 P).

Measures (height x width x depth): 50 x 905 x 500 mm (3,15 x 35,63 x 19,69 in).

Weight: 20 Kg (44,09 lbs).

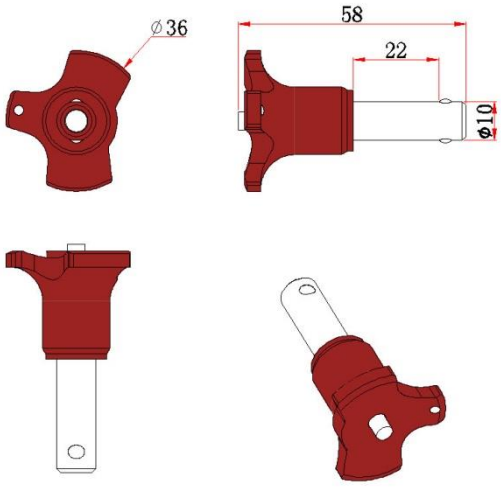

Pin locks

They allow the attachment of the box to the different components, as well as the combination between several boxes to form the array.

They have a safety extraction/insertion system through the use of a locking button.

Note: the specifications of these components may be changed without prior notice. To be aware of the latest modifications, please consult Pro DG Systems website periodically.

How to fly the system up

Important: before flying the system, carefully read the subsection “Safety instructions”, located in the “Flight hardware” section (pages 32 - 33).

1 Remove the locking pins located on the front and rear hardware to release the cams.

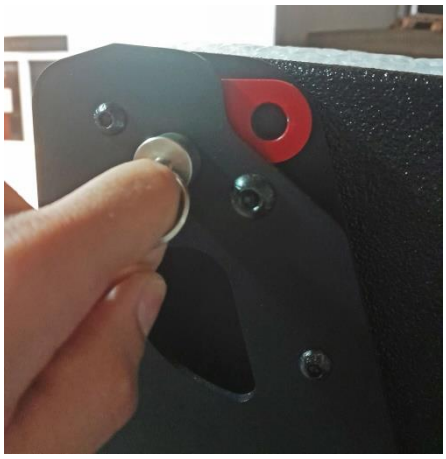

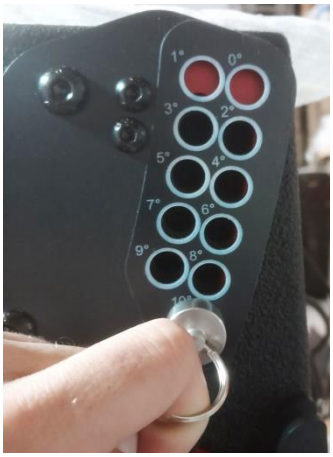

2 Pull the cams up and secure them again using the pins. On the rear hardware; set the cam at the desired graduation, the point “0” represents a zero degree of angulation.





3 Install the fly bar to the box using the fixation pin locks.

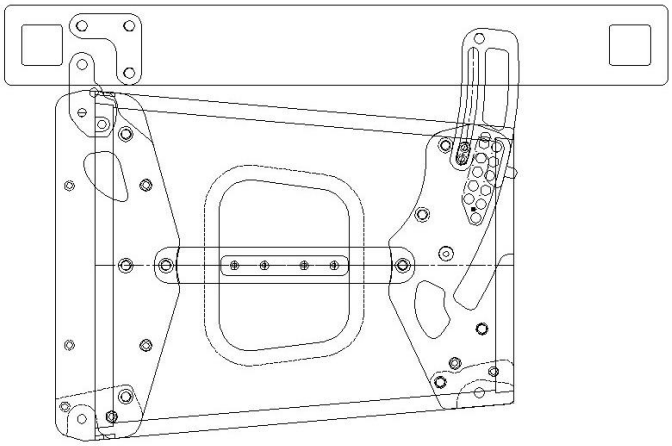

4 Then repeat step 2 for the following boxes fixation.

The design of the cams included in the rear hardware prevents uncontrolled swinging when disassembling the last box of the array assembly.



Note: use TR LA 212 transport trolley to facilitate lifting the system from the ground; stacking the boxes on the trolley first and installing the fly bar last.

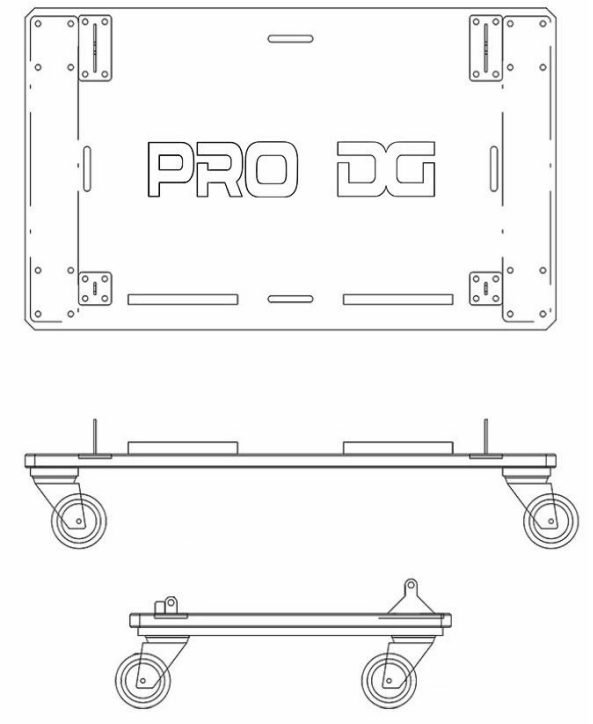

Stack mode usage

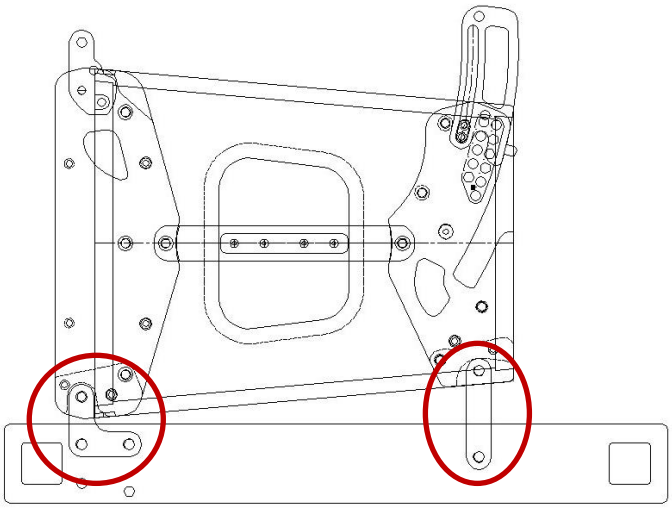

By using the cams built into FB LA 212;

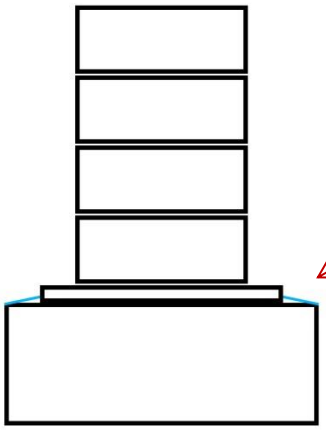

If the array is stacked on a subwoofer, it will be necessary to secure it by using slings. In any case, it is not recommended to stack more than 6 AVIATOR LA 212 P units.

By using TR LA 212 transport trolley. Simply placing the stacked box assembly on the skid above the subwoofer **(1)**. Once located; it will be necessary to press the brake pedals of the trolley **(2)**, as well as securing the array to the subwoofer by using slings **(3)**

In any case, it is not recommended to stack more than 6 AVIATOR LA 212 P units.

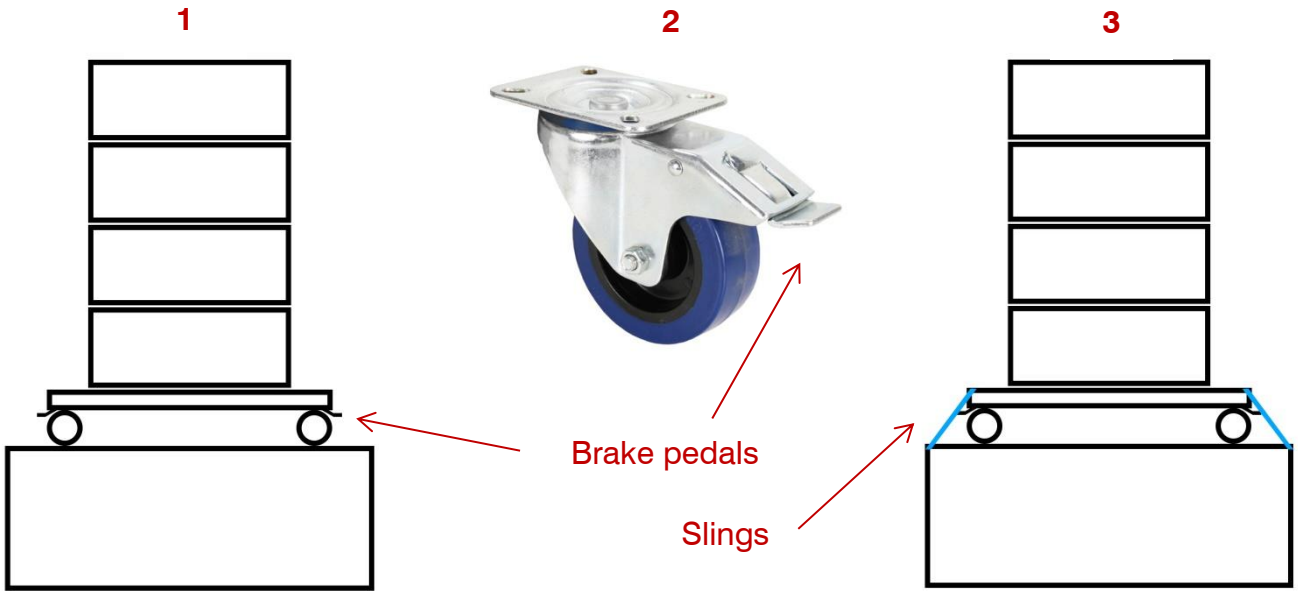

Ease Focus prediction software

At Pro DG Systems we know that manufacturing high-quality speakers is an important part of the job. The guarantee of being able to use the systems properly is the other fundamental part of our work. Good tools make the difference to achieve optimal use of systems.

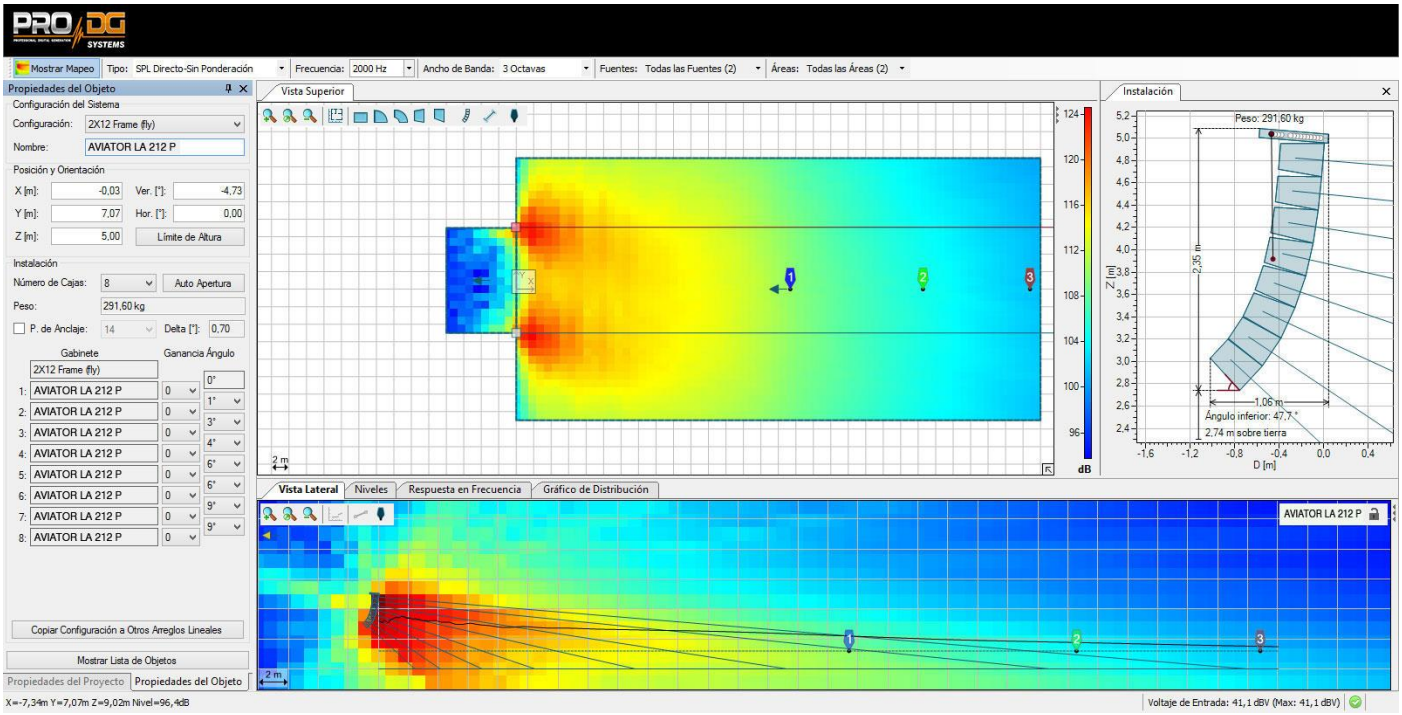

AVIATOR LA 212 P has Ease Focus V3 prediction software with which we can simulate the behavior of different systems in different places and circumstances, as well as obtain information on coverage, frequency, SPL and general behavior of the system, in a simple and comfortable way for the user. It is very easy to use and we have training courses for users of Pro DG Systems products. For more information, consult our technical service at: sat@prodgsystems.com

Ease Focus prediction software can be downloaded directly at Pro DG Systems website: https://prodgsystems.com/19-scrpt-software.html

You can download the user guide of Ease Focus 3 software here

You will find GLL files to simulate the behavior of AVIATOR LA 212 P at: www.prodgsystems.com

Accessories

TR LA 212

Transport trolley for four units AVIATOR LA 212 P.

It has a special polyurea finish resistant to impacts and inclement weather.

It has a brake system and slots for fixing it using slings, etc.

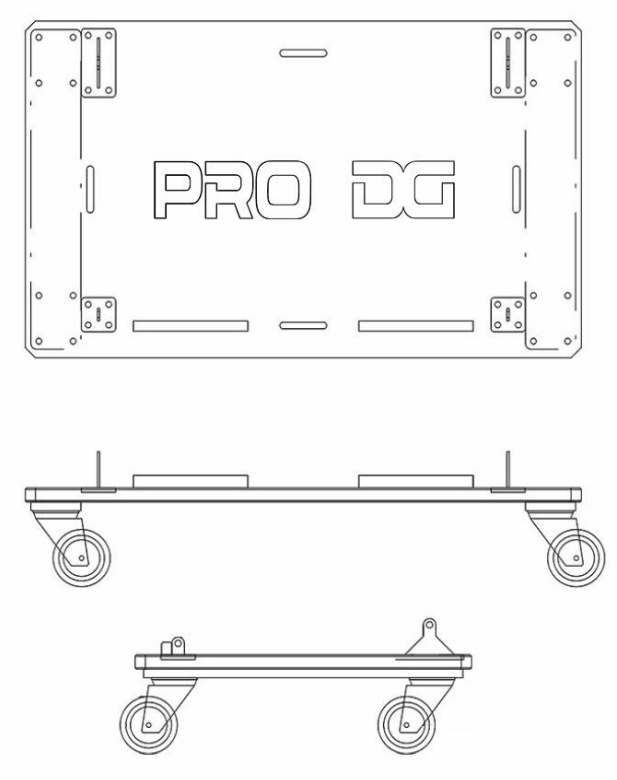



CV LA 212

Protection cover for four units AVIATOR LA 212 P.

Made of waterproof material.

Complete system wiring ready to go.



AVIATOR LA 212 P

PRO DG SYSTEMS INTERNATIONAL
P.I. Santa Bárbara. C/ Aceituneros nº 5.
41580 Casariche (Sevilla), Spain
Tel: +34 954 011 095
Cel: +34 678 548 947
export@prodgsystems.com
info@prodgsystems.com
www.prodgsystems.com

PRO DG SYSTEMS AMERICA
1225 NW 93rd CT
Doral, FL, 33172
Español: (786)-715-4705
English: (786) 314-1856
sales@prodgamerica.com
www.prodgamerica.com